CME

A Simplified Algorithm for the Use of Z-Plasty

Rod J. Rohrich, M.D., and Ross I. S. Zbar, M.D.

Dallas, Texas

Learning Objectives: After studying this article, the participant should be able to: 1. Understand the theoretical geometry behind the Z-plasty maneuver. 2. Recite the reasons why application of the Z-plasty differs in vivo from that calculated in theory. 3. Describe how the number of limbs, flap thickness, and flap location may alter Z-plasty outcome. 4. Discuss the indications for the use of Z-plasty.

For the neophyte, the Z-plasty maneuver can be a surgical procedure veiled in intrigue. The theoretical mechanics of Z-plasty geometry are described, establishing that the new length of the central limb in a 60-degree Z-plasty is $\sqrt{3}$ of its original length. Factors such as skin tension, flap thickness, and flap location can, in application, distort the desired outcome. An algorithm is established that describes the indications and simplifies the execution of this technique. (*Plast. Reconstr. Surg.* 103: 1513, 1999.)

For the neophyte, the Z-plasty can be a surgical procedure veiled in intrigue—always working but requiring a variety of soft-tissue acrobatics, last-minute tissue trimming, and often involving moments of fear. We have developed an algorithm for the use of Z-plasty and explain its fundamental geometry in simple terminology.

The first reference to Z-plasty was by Denonvilliers in 1856,[1] in which he discussed the surgical correction of lower lid ectropion. In 1870, Szymanowski[2] included a description of the Z-plasty technique in his textbook for relief of oral commissure contracture. McCurdy,[3] acknowledging that the technique was not new, introduced Z-plasty surgery to the American literature in 1913. He described a Z-shaped incision with limited elevation of flaps. By manually placing tension on the wound, the margins of the flaps were literally allowed to slide into the position of least resistance. This was secured centrally, and the ends were permitted to granulate secondarily as needed.[3] The first truly mathematic investigation of Z-plasty geometry is credited to Limberg in 1929 and 1935.[4,5] He described the Z-plasty maneuver by drawing a Z possessing a central line with arms in opposing directions of equal length and then completed the figure as a parallelogram. This allowed for the first mathematic analysis.

Davis[6] popularized the Z-plasty technique in 1931. Although he described true transposition flaps, the angles of the lateral limbs were left to the discretion of the surgeon. Fifteen years later in 1946, Davis[7] published photographs of his 60-degree copper arrowheads, with which he designed his Z-plasty flaps. Additionally, he recommended using blunt-tipped flaps in scarred skin because these were less likely to slough.[8] As is true today, Davis suggested that surgeons should "delay operative work on contracted scars until nature, assisted by massage and passive motion, has had time to do all she can."[6]

Mechanics

Before explaining when to use a Z-plasty, the mechanics of this operation must be clearly understood by the surgeon. The key to facile Z-plasty design is symmetry. The length of each lateral limb and the central limb must all be equal. Although the actual lengths of the limbs can vary considerably, each limb must be of equal length. Additionally, for the simple Z-plasty design, the lateral limb-central limb angles must also always be identical. This allows the subsequently developed flaps to be interchanged easily.[9] Much last-minute undermining and trimming is avoided by following this

From the Department of Plastic and Reconstructive Surgery at the University of Texas Southwestern Medical Center at Dallas. Received for publication September 10, 1998.

rule. Whether a Z or a Z-in-reverse design is selected does not affect the maneuver (Fig. 1).

For the best outcome, a 60-degree angle is selected between the central limb and the lateral limbs. If the surgeon places the central limb over the scar (BC), each lateral limb (AB and CD) must therefore come off in opposite directions at 60-degree angles in either a Z or Z-in-reverse design (Fig. 2, *left*). The length of the central limb (BC) is X, as well as each lateral limb (AB and CD). Because the angle of 60 degrees has been selected, two 30-60-90-degree triangles are described. Therefore, before any tissue rotation, the length of AD (the future central limb after flap rotation) can be calculated based solely on the Pythagorean dictum $A^2 + B^2 = C^2$ for 90-degree triangles. If the entire length of AD is called $2Y$, then each side (AE and ED) of each triangle is of length Y. Using the Pythagorean theorem, it can be proven that $2Y = \sqrt{3}\ X$. Therefore, the two-dimensional geometry dictates that the distance AD is always $\sqrt{3}$ the length of BC.

The finesse of the Z-plasty occurs with the tissue rotation. It is through the elevation and rotation of the triangular flaps that the forces of contracture are reoriented and nearby tissue is recruited. After perfect geometric rotation, two 30-60-90 triangles continue to be described but oriented differently (Fig. 2, *right*). In an ideal situation after flap rotation, the former central limb BC now becomes B′C′, which has the length of AD. The new central limb A′D′ now has the length of the former central limb BC. Therefore, with the change in forces of pull because of flap rotation, the former central limb BC becomes $2Y$ in length, and the new central limb A′D′ is X in length. Thus, in Z-plasty after flap rotation, the new length of the former central limb B′C′ is $2Y$. Because $2Y = \sqrt{3}X$, B′C′ is $\sqrt{3}$ of its original length. Thus, the gain in length of BC after flap rotation is equal to its old length BC subtracted from its new length B′C′. This can be expressed as $2Y - X$ or $\sqrt{3}\ X - X$ or $(\sqrt{3} - 1)X$

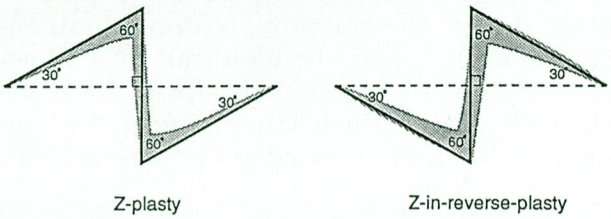

FIG. 1. The 60-degree Z-plasty and Z-in-reverse plasty.

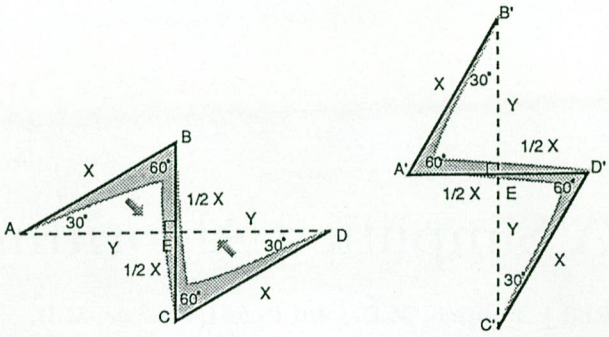

FIG. 2. (*Left*) The 60-degree Z-plasty before flap rotation. AB and CD are the lateral limbs, whereas BC is the central limb. The length of AB = CD = BC = X. The length of AD = $2Y$. Triangles ABE and DCE are symmetric and describe two 30-60-90-degree triangles. According to the Pythagorean theorem, $A^2 + B^2 = C^2$, and therefore $(AE)^2 + (BE)^2 = (AB)^2$. Solving this equation for Y leads to $Y = \sqrt{3}/2X$ or $2Y = \sqrt{3}\ X$. (*Right*) The same 60-degree Z-plasty after ideal flap rotation. Notice two 30-60-90-degree triangles are still described but in a different orientation. Thus, the former central limb BC now is B′C′ and of length $2Y$.

or approximately $0.7X$. Dingman[10] recognized this fact by stating that the gain in length of a Z-plasty maneuver can be calculated by subtracting BC from AD. To truly understand this, every surgeon using Z-plasty should perform this procedure on a piece of paper because it is somewhat counterintuitive.

What happens when the angles of the lateral limb-central limb relationship are changed? This no longer creates a 30-60-90-degree triangle as initially described in Figure 2. However, following the same calculations with the Pythagorean theorem, the amount of gain in length of the central limb after rotation can be calculated in each scenario (Table I).

REALITY

Skin Tension

In 1967, Gibson and Kenedi[11] demonstrated how skin tension varied within each region of

TABLE I

Theoretical Gain in Length of the Central Limb (BC) with Various Central Limb-Lateral Limb Angles in the Z-Plasty Maneuver

Angle of Each Lateral Limb (in Degrees) of Z-Plasty	Theoretical Gain in Length of Central Limb (%)
30	25
45	50
60	75
75	100
90	120

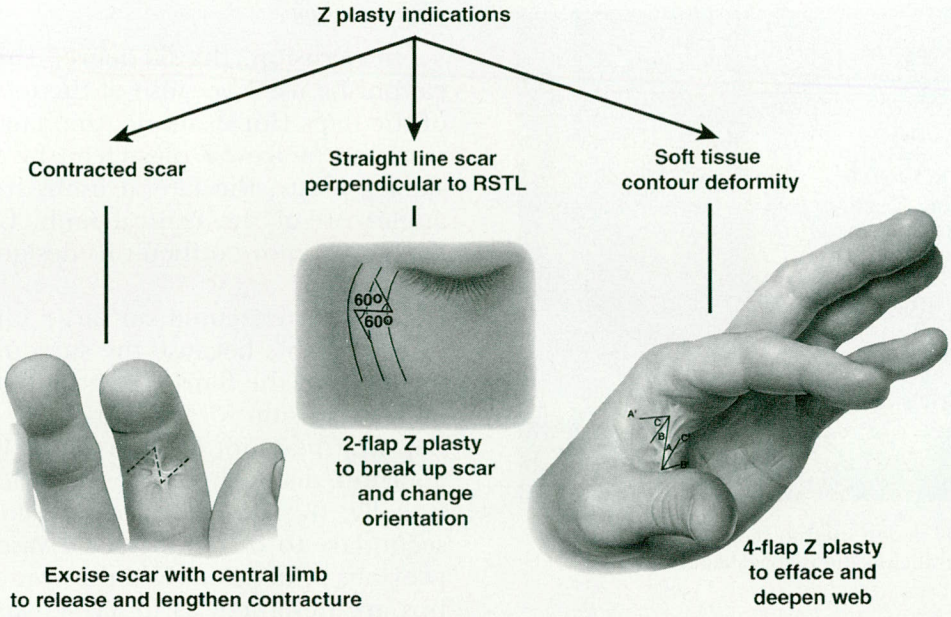

FIG. 3. An algorithm for the use of Z-plasty.

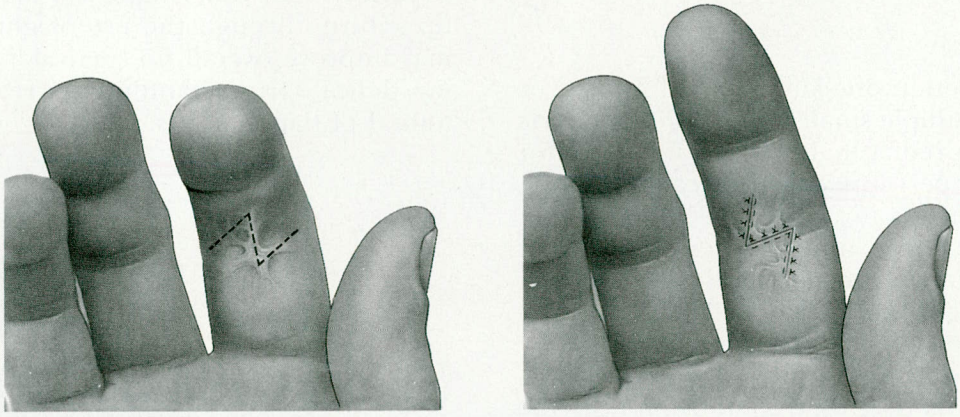

FIG. 4. Use of the Z-plasty maneuver to lengthen a scar contracture of the volar surface of the right index finger proximal interphalangeal joint. (*Left*) A 60-degree Z-plasty is drawn with the central limb (BC) oriented along the scar contracture. (*Right*) Lengthening and release of the scar is achieved after execution of the Z-plasty maneuver.

the body. It was Furnas and Fischer,[12] however, who demonstrated 4 years later how the geometric calculations for gain in length of a Z-plasty on a two-dimensional surface differed when performed in vivo on a three-dimensional surface. The key element was skin tension.

Depending on the region of the body and the size of the flaps rotated, skin tension will, of course, differ. This translates into distorted rotation flaps that require different and unequal amounts of tension for closure. This consequently changes the gain in length along the central limb. Furnas and Fischer[12] showed that lengthening was always less than that predicted mathematically, ranging from 55 to 84 percent of the predicted value.

The answer to this length dilemma is not necessarily always using the Z-plasty angle that will yield the greatest gain in length. This is because a 90-degree Z-plasty, although theoretically producing a 120-percent gain in length, actually requires approximately 10 times as much tension for closure as a 30-degree Z-plasty.[12] In living tissue, this amount of tension on the wound in a 90-degree Z-plasty leads to scar dehiscence, hypertrophy, or contracture—thus nullifying the desired outcome. The best Z-plasty angle to use that generates adequate central limb lengthening and yet

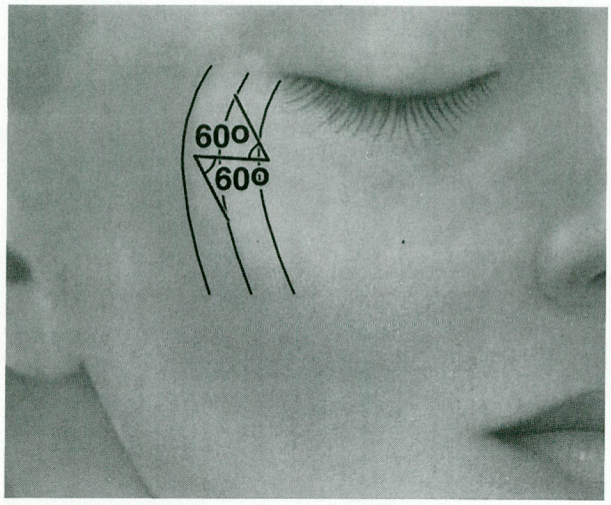

FIG. 5. Z-plasty design used to reorient a scar in a favorable direction parallel to the relaxed skin tension line.

does not require too much tension for closure is the 60-degree Z-plasty.

Number of Limbs

Which is better: one large-limbed Z-plasty or a series of multiple small Z-plasties? Geometric calculations predict that the gain in length for each Z-plasty performed is identical; therefore, in theory there is no difference between one large Z-plasty and multiple small Z-plasties lined up in tandem—as long as the total central limb lengths are identical. In reality, however, when multiple Z-plasties are used, the field of tension exerted by each maneuver impinges upon its neighbor, thereby limiting the overall gain in length. Thus, the total gain in length of the maneuver increases with the size of the Z-plasty limbs and decreases with the number of Z-plasties executed in tandem.[12] Of course aesthetic and functional concerns prevent the routine use of large-limbed Z-plasties and, on occasion, dictate the less desirable, multiple, small Z-plasties.

Flap Thickness

What is the appropriate thickness for these flaps? At minimum, the flaps must contain full-thickness skin, such that dermis is present to prevent secondary wound contracture. If the flaps are too thick, containing a significant layer of subcutaneous fat or muscle, rotation of the flaps will be limited secondary to tissue bulk. Thus, the ideal flap thickness is located between the subdermal plexus and the subcutaneous fatty tissue.

Flap Location

On occasion, the 60-degree simple Z-plasty cannot be used because of the location of one of the flaps (for example, the hairline). In this situation, a skew Z-plasty can be used. In the skew Z-plasty, the lateral limbs have different angles off of the central limb. Conceptually, this flap is more difficult to design and should be avoided.

Z-plasties executed on large burn scars are unpredictable because the surrounding tissue, from which the flaps are recruited, has irregular skin tension forces. This leads to a rotation flap that may not fit appropriately because of aberrant distorting forces on the skin. Additionally, the flap tips are at risk for necrosis secondary to decreased local vascularity from previous injury. To avoid this, widened Z-plasty tips are designed, as described more than 50 years ago.[6,8] Furthermore, it has been shown experimentally that simple avoidance of direct tip suture, through the use of glues or tapes, may improve overall tip survival.[13] Needless to say, delicate tissue handling decreases the likelihood of flap necrosis.

FIG. 6. (*Above*) The four-flap Z-plasty is used to change the contour of a web of the left adductor space. (*Below*) Execution of this maneuver effaces the web.

APPLICATION

Through soft-tissue rotation, Z-plasty accomplishes three things: (1) lengthens a contracted scar, (2) breaks up a straight line, and (3) shifts soft-tissue contour (Fig. 3).[14]

The usefulness of Z-plasty is evident. Through its ability to shift skin, the original central limb (BC) increases in length by a factor of $\sqrt{3}$. Thus, if a bowstring-type scar contracture, which limits functional movement, is placed along the central limb (BC) of a Z-plasty, the scar will lengthen after a Z-plasty is executed. This will create a change in distorting forces and improve mobility (Fig. 4). This also works particularly well with circumferential or annular contractures.[15]

Z-plasty can be used to break up a straight line scar, as its execution reorients the suture line from BC to A′D′. This is not only helpful in preventing postoperative contracture but is aesthetically functional when camouflaging an incision. If a scar crosses a relaxed skin tension line at or near 90 degrees, it can be reoriented and thereby become less noticeable if a Z-plasty maneuver is executed with the central limb (BC) incorporating the offending scar (Fig. 5).

Webs can be effaced and overall contour improved if the crest of the web is placed along the central limb. After Z-plasty flap rotation, the new central limb rests in a valley, thereby eliminating the web. The four-flap Z-plasty, described by Woolf and Broadbent,[16] works particularly well (Fig. 6).

Through practiced application, the reconstructive surgeon can become skilled with the Z-plasty maneuver and use this simple, yet powerful tool to his or her advantage. Key points to follow for successful execution include: (1) preoperative surgical markings delineating symmetric central and lateral limbs as well as accurate 60-degree angles, (2) maintaining the appropriate depth of flap elevation, (3) using proper tissue-handling techniques when rotating and insetting the flaps, (4) recalling that by using the Pythagorean theorem, ideally B′C′ will be increased to a new length of $\sqrt{3}$ the length of BC, and (5) the scar will be reoriented along A′D′.

There is no longer an excuse for last-minute fear when commencing the Z-plasty maneuver.

Rod J. Rohrich, M.D.
Department of Plastic and Reconstructive Surgery
University of Texas Southwestern Medical Center at Dallas
5323 Harry Hines Boulevard
Dallas, Texas 75235

REFERENCES

1. Denonvilliers. Blepharoplastie. *Bull. Soc. Chir. Paris* 7: 243, 1856.
2. Szymanowski, J. *Handbuch der Operativen Chirurgie.* 1870. Pp. 262–278.
3. McCurdy, S. L. Z-plastic surgery. *Surg. Gynecol. Obstet.* 16: 209, 1913.
4. Limberg, A. A. *Skin Plastic with Shifting Triangle Flaps.* Leningrad Traumatological Institute, 1929. Pp. 862.
5. Limberg, A. A. *Collection of Scientific Works in Memory of the 50th Anniversary of the Medical Post-Graduate Institute.* Leningrad, 1935. Pp. 461–489.
6. Davis, J. S. The relaxation of scar contractures by means of the Z-, or reversed Z-type incision. *Ann. Surg.* 94: 871, 1931.
7. Davis, J. S. Present evaluation of the merits of the Z-plasty operation. *Plast. Reconstr. Surg.* 1: 26, 1946.
8. Davis, J. S., and Kitlowski, E. A. The theory and practical use of the Z-incision for the relief of scar contractures. *Ann. Surg.* 109: 1001, 1939.
9. McGregor, I. A. The Z-plasty. *Br. J. Plast. Surg.* 19: 82, 1966.
10. Dingman, R. O. Some application of the Z-plastic procedure. *Plast. Reconstr. Surg.* 16: 246, 1955.
11. Gibson, T., and Kenedi, R. M. Biomechanical properties of skin. *Surg. Clin. North Am.* 47: 279, 1967.
12. Furnas, D. W., and Fischer, G. W. The Z-plasty: Biomechanics and mathematics. *Br. J. Plast. Surg.* 24: 144, 1971.
13. Wilkinson, T. S., and Rybka, J. R. Experimental study of prevention of tip necrosis in ischemic Z-plasties. *Plast. Reconstr. Surg.* 47: 37, 1971.
14. Furnas, D. W. The four fundamental functions of the Z-plasty. *Arch. Surg.* 96: 458, 1968.
15. Stevenson, T. W. Release of circular constricting scar by Z flaps. *Plast. Reconstr. Surg.* 1: 39, 1946.
16. Woolf, R. M., and Broadbent, T. R. The four flap Z-plasty. *Plast. Reconstr. Surg.* 49: 48, 1972.

Self-Assessment Examination follows on the next page.